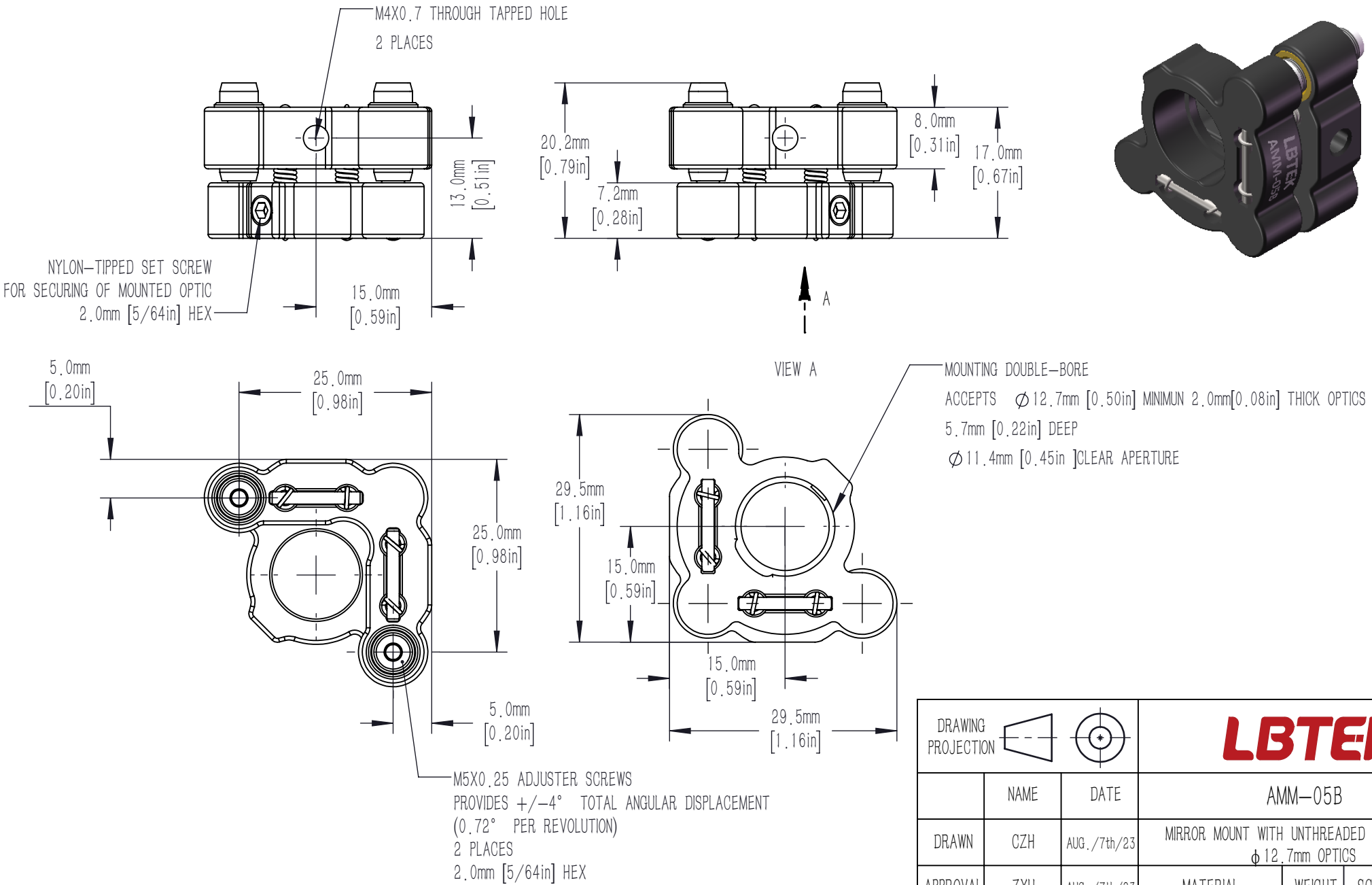

DRAWING PROJECTION			LBTEK			
	NAME	DATE	AMM-05B			
DRAWN	CZH	AUG./7th/23	MIRROR MOUNT WITH UNTHREADED HOLE FOR ϕ12.7mm OPTICS			
APPROVAL	ZXU	AUG./7th/23	MATERIAL	WEIGHT	SCALE	REV
FOR INFORMATION ONLY NOT FOR MANUFACTURING PURPOSES			N/A	0.03 Kg	1.5:1	C