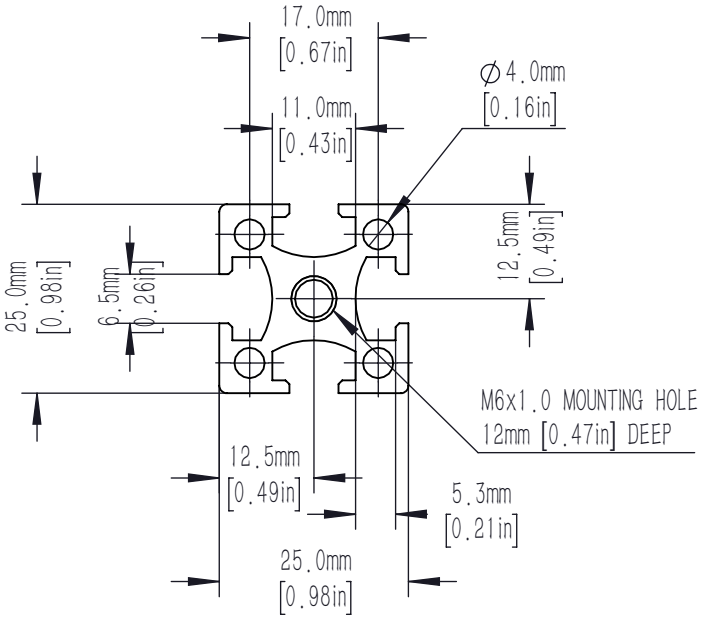

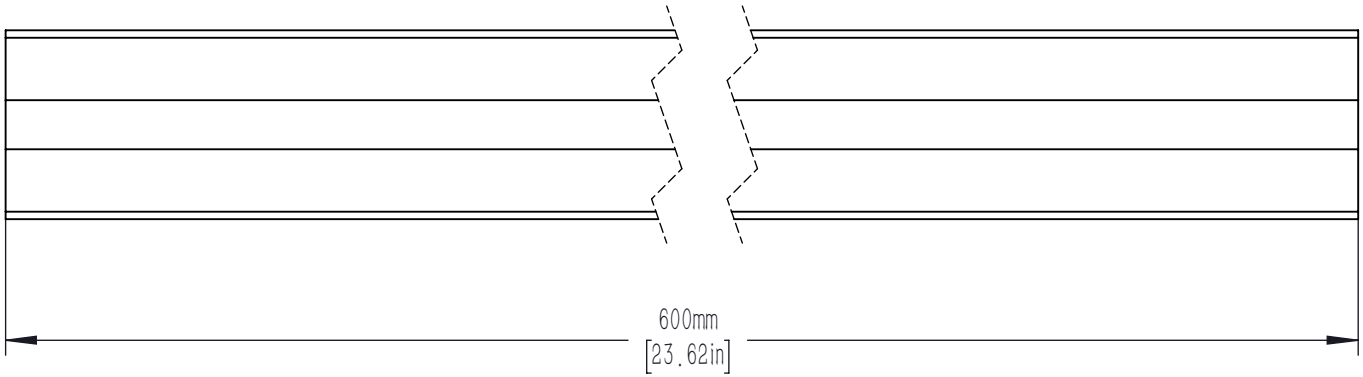

DRAWING PROJECTION			LBTEK			
	NAME	DATE	AP25L600			
DRAWN	CZH	SEPT./1st/21	ALUMINUM PROFILE			
APPROVAL	ZXU	SEPT./1st/21	MATERIAL	WEIGHT	SCALE	REV
FOR INFORMATION ONLY NOT FOR MANUFACTURING PURPOSES			N/A	0.511 Kg	1:1	B