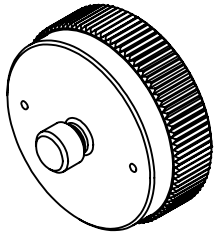

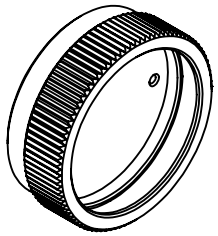

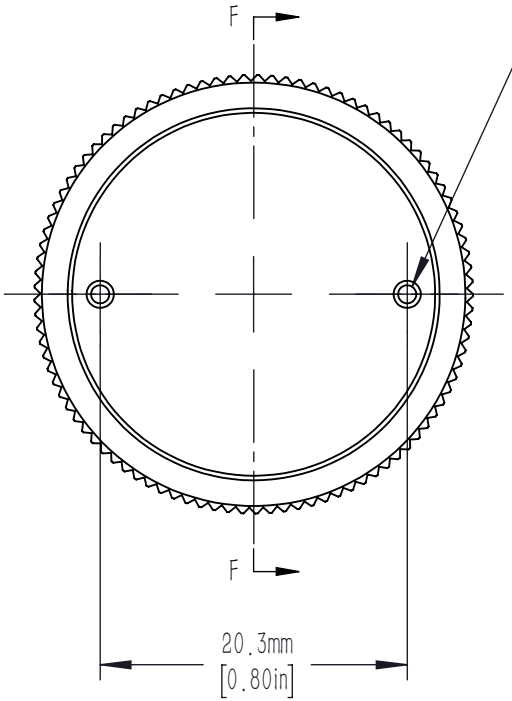

SPANNER WRENCH HOLES
FOR USE WITH OWR-1B(NOT INCLUDED)
2 PLACES

F-F

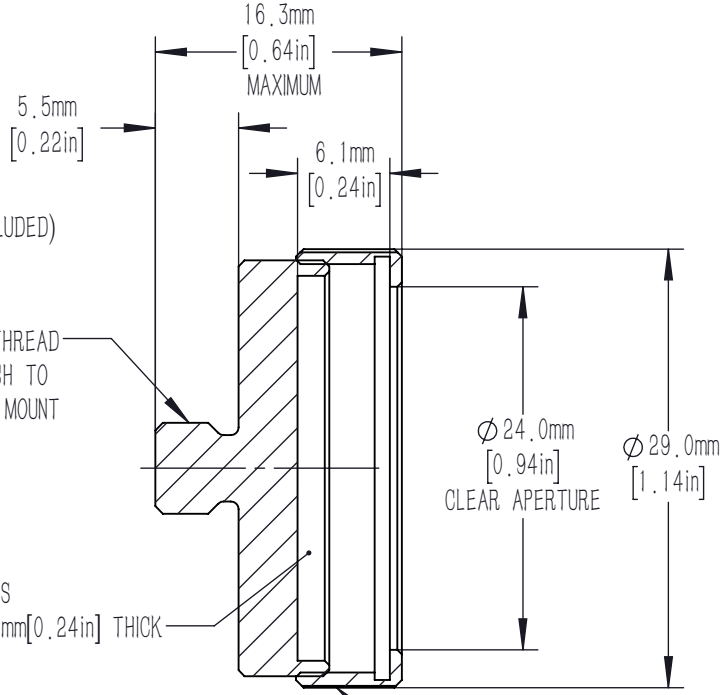

DRAWING PROJECTION			LBTEK			
	NAME	DATE	FMH25			
DRAWN	YCH	MAY./25th/20	ϕ25.4mm OPTIC HOLDER FOR AMMS-A6			
APPROVAL	ZHE	MAY./25th/20	MATERIAL	WEIGHT	SCALE	REV
FOR INFORMATION ONLY NOT FOR MANUFACTURING PURPOSES			N/A	0.008 Kg	2:1	B