| | TYPE | SHAPE | CA | R | k | A4 | A6 | A8 | A10 | A12 | A14 | A16 |
|---|---|---|---|---|---|---|---|---|---|---|---|---|
| S1 | ASPHERE | CX | ∅1.60 | 2.838589 | −0.576643 | 0 | 0 | 0 | 0 | 0 | 0 | 0 |
| S2 | PLANO | PL | ∅1.14 | PLANO | 0 | 0 | 0 | 0 | 0 | 0 | 0 | 0 |

$$Z = \frac{Y^2}{R(1+\sqrt{1-(1+K)Y^2/R^2})} + \sum_i A_{2i} r^{2i}$$

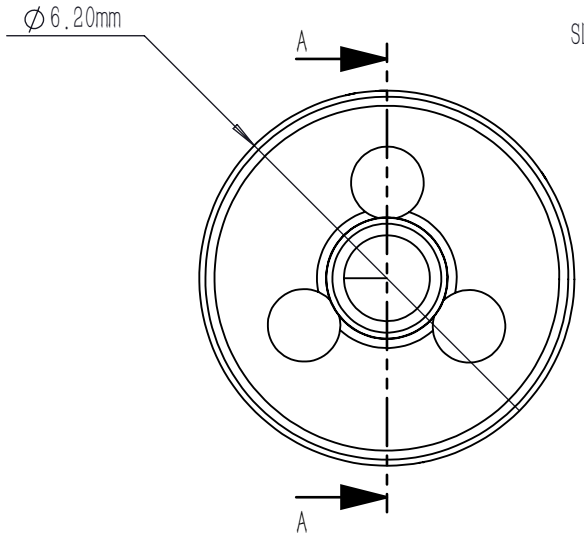


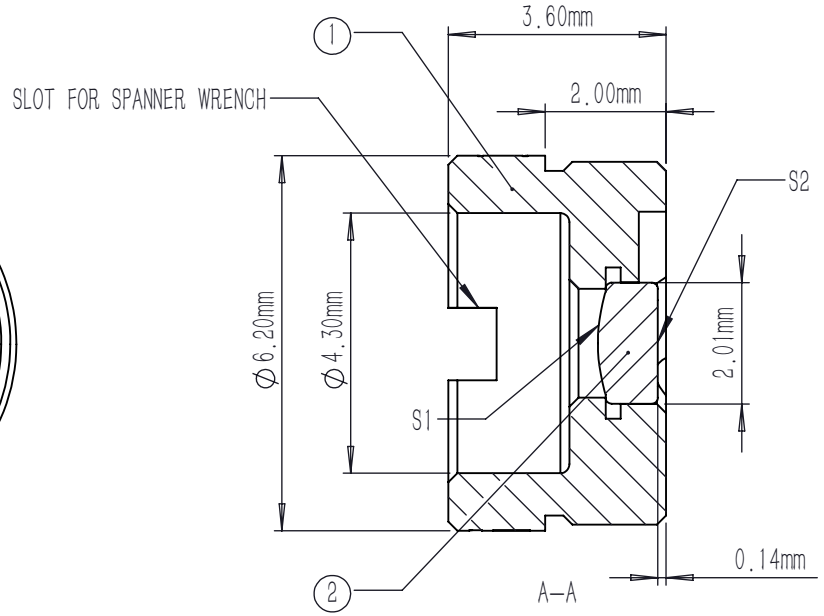


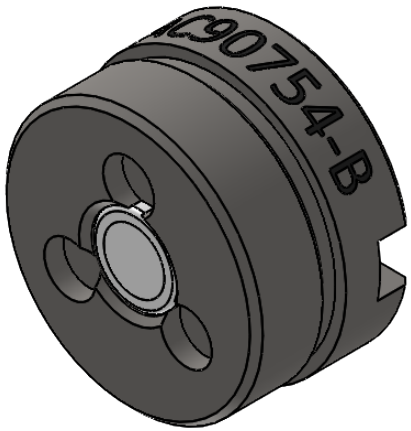


NOTES:

1. MATERIAL: D-ZK3
2. DESIGN WAVELENGTH: 1550 nm
3. WORKING WAVELENGTH: 600 nm–1050 nm
4. CLEAR APERTURE: (S1) ∅1.60 mm, (S2) ∅1.14 mm
5. NUMERICAL APERTURE: 0.2
6. FOCAL LENGTH: 5.0 mm
7. FOCAL LENGTH TOLERANCE: ±1.0 %
8. BACK FOCAL LENGTH(REF): bf=4.4 mm
9. DIAMETER TOLERANCE: ±0.015 mm
10. THICKNESS TOLERANCE: ±0.05 mm
11. CHAMFER: 0.2 mm,45 °
12. SURFACE QUALITY: 40–20 SCRATCH–DIG
13. CENTRATION: <30 arcmin
14. MAXIMUM TEMPERATURE: 250 °C(482 °F)
15. AR COATING(S1,S2): Ravg<0.5 %@600–1050 nm

| | PART DESCRIPTION | MATERIAL |
|---|---|---|
| ① | LENS MOUNT | 303 STAINLESS STEEL |
| ② | AC90754–B | D–ZK3 |

| | | | | | | |
|---|---|---|---|---|---|---|
| DRAWING PROJECTION | | | LBTEK | | | |
| | NAME | DATE | MAC90754–B | | | |
| DRAWN | SHAN | APR./30th/24 | ASPHERIC CONDENSER LENS | | | |
| APPROVAL | WCHENG | APR./30th/24 | MATERIAL | WEIGHT | SCALE | REV |
| FOR INFORMATION ONLY NOT FOR MANUFACTURING PURPOSES | | | D–ZK3 | 0.53g | 8:1 | A |