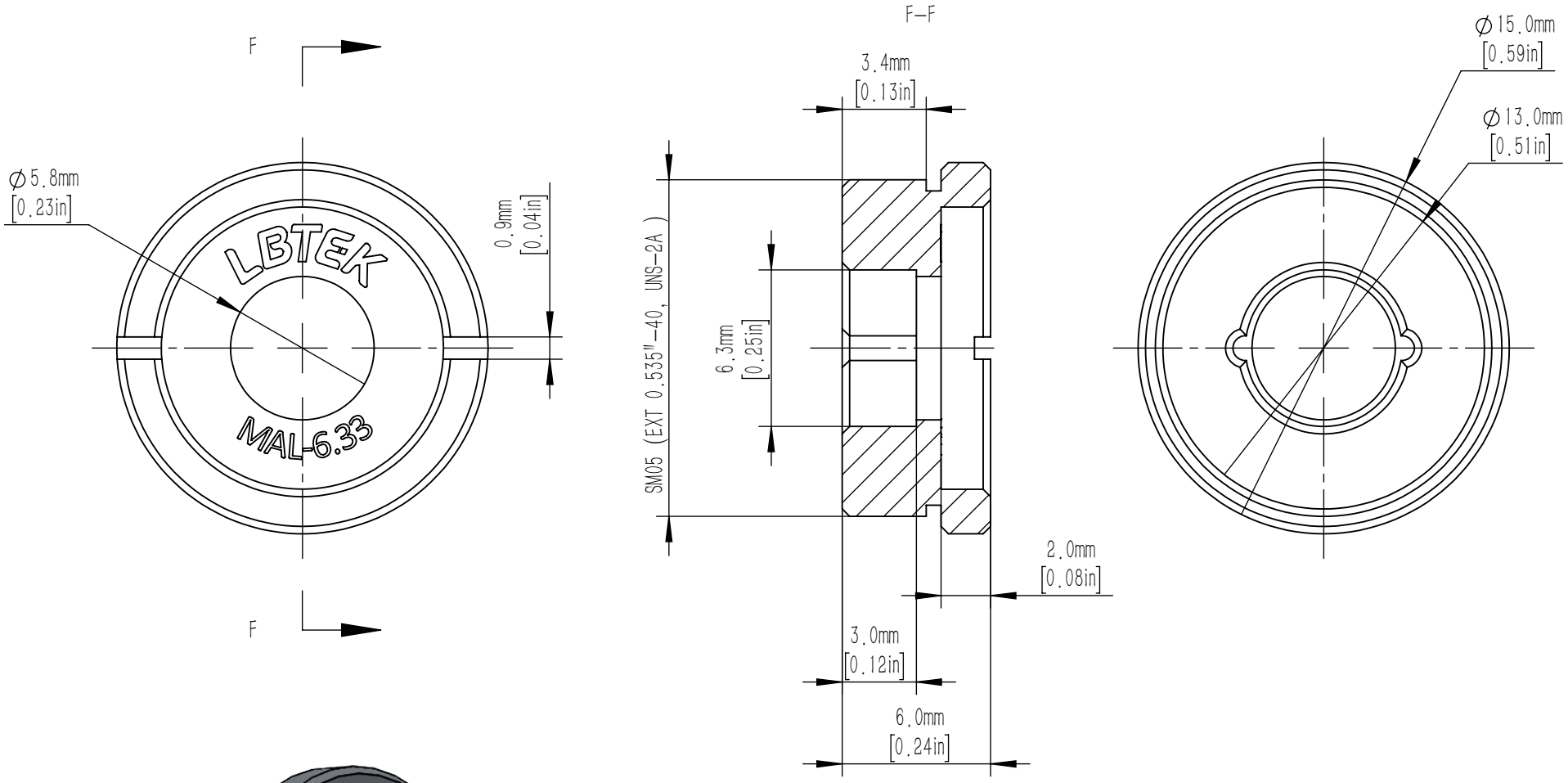

DRAWING PROJECTION			LBTEK			
	NAME	DATE	MAL–6.33			
DRAWN	SSO	JAY./6th/23	ASPHERICAL CONDENSE LENS ADAPT RACK			
APPROVAL	ZXU	JAY./6th/23	MATERIAL	WEIGHT	SCALE	REV
FOR INFORMATION ONLY NOT FOR MANUFACTURING PURPOSES			STAINLESS STEEL	0.0046Kg	4:1	B