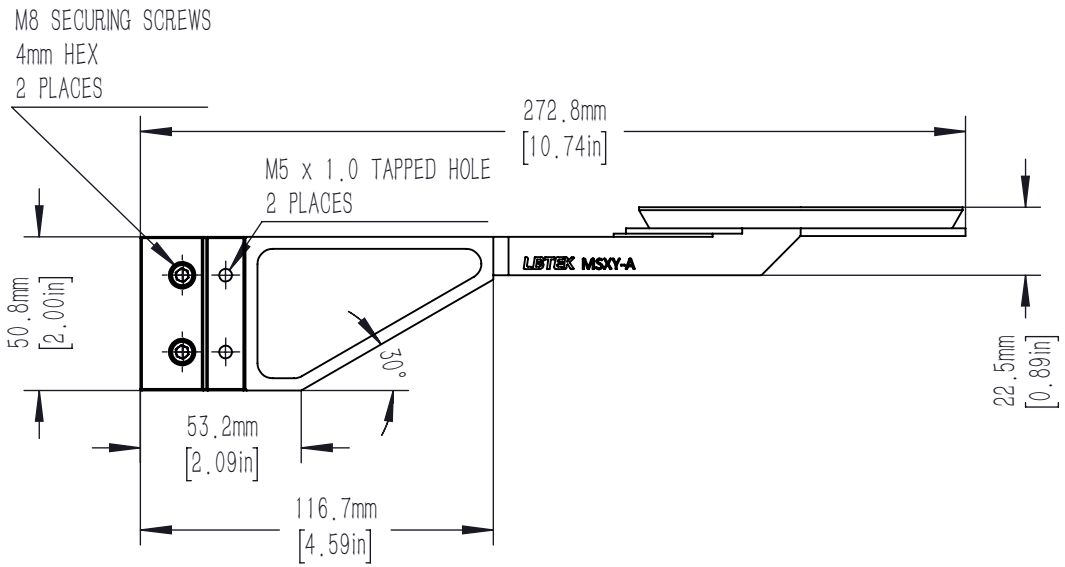


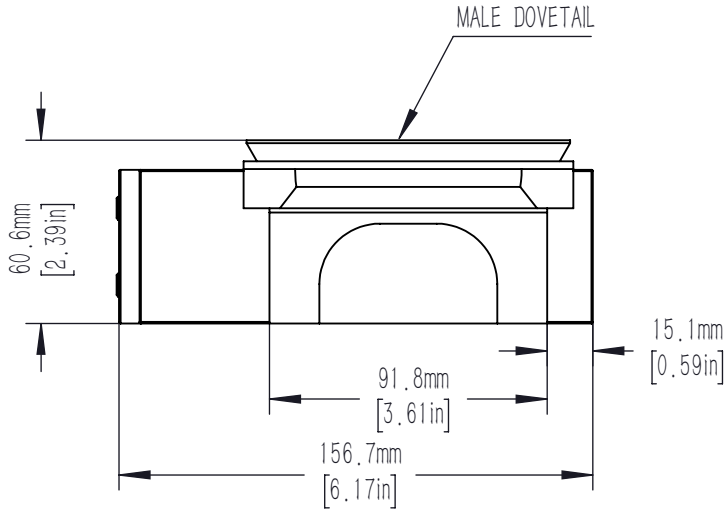


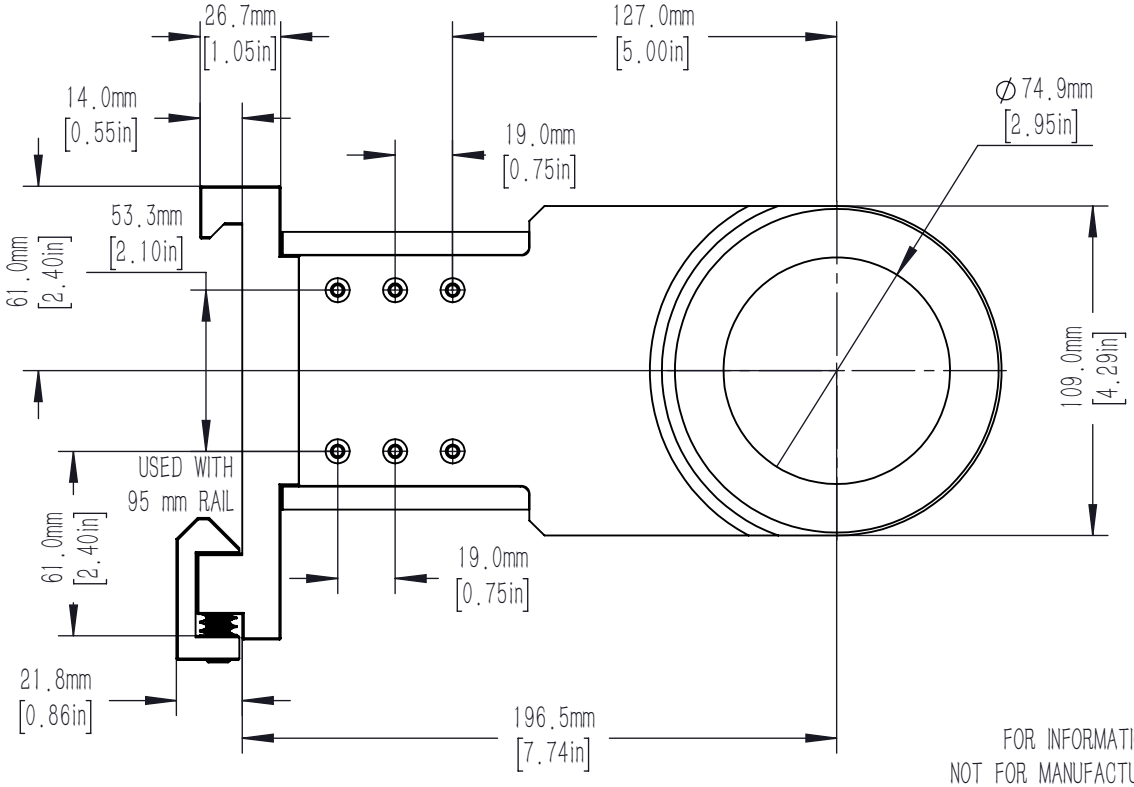


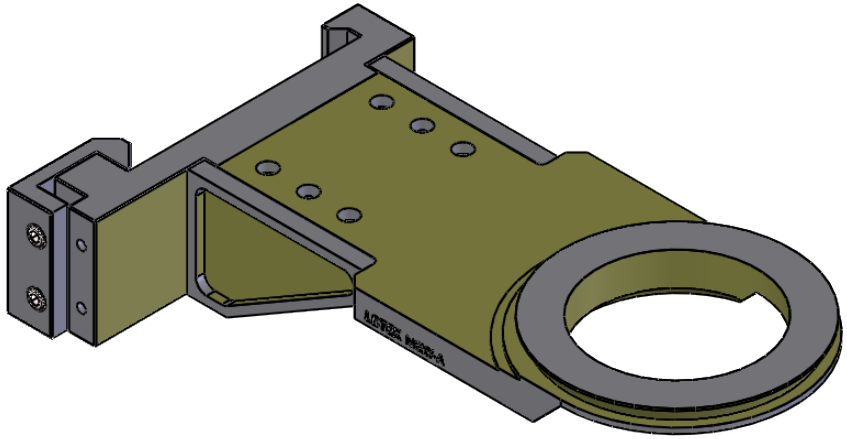


FOR INFORMATION ONLY
NOT FOR MANUFACTURING PURPOSES

| | | | | | | |
|---|---|---|---|---|---|---|
| DRAWING PROJECTION | | | LBTEK | | | |
| | NAME | DATE | MSXY–A | | | |
| DRAWN | PCH | AUG./13th/25 | OLYMPUS STAGE ADAPTER FOR MICROSCOPE | | | |
| APPROVAL | YLI | AUG./13th/25 | MATERIAL | WEIGHT | SCALE | REV |
| FOR INFORMATION ONLY NOT FOR MANUFACTURING PURPOSES | | | N/A | 1.372 Kg | 1:2.5 | A |