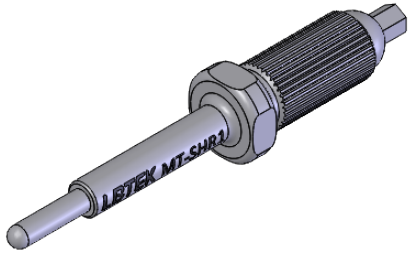

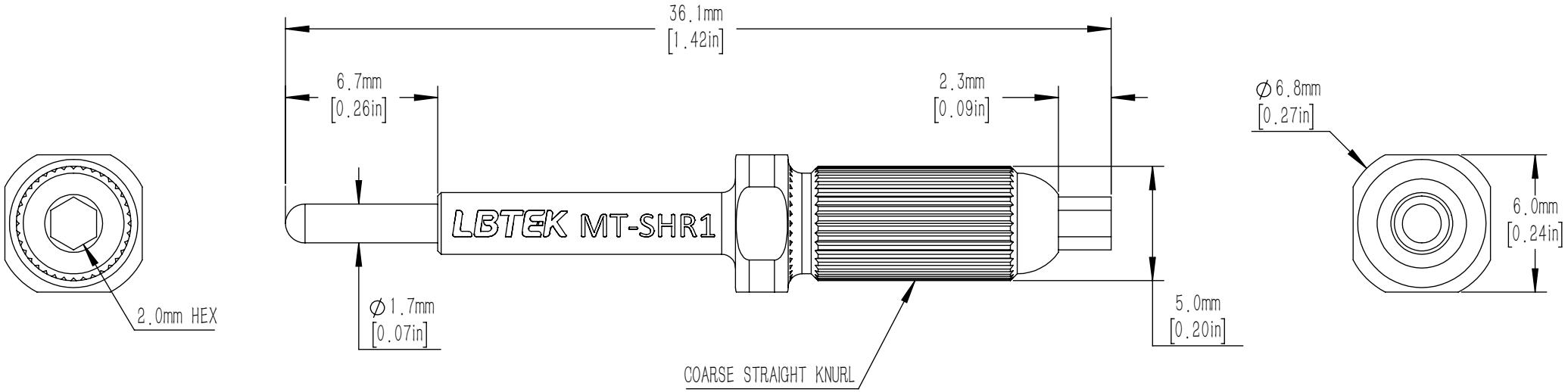

DRAWING PROJECTION			LBTEK			
	NAME	DATE	MT–SHR1			
DRAWN	HDE	May./10th/22	SIDE HOLE ADJUSTMENT TOOL			
APPROVAL	ZXU	May./10th/22	MATERIAL	WEIGHT	SCALE	REV
FOR INFORMATION ONLY NOT FOR MANUFACTURING PURPOSES			N/A	0.001 Kg	4:1	B