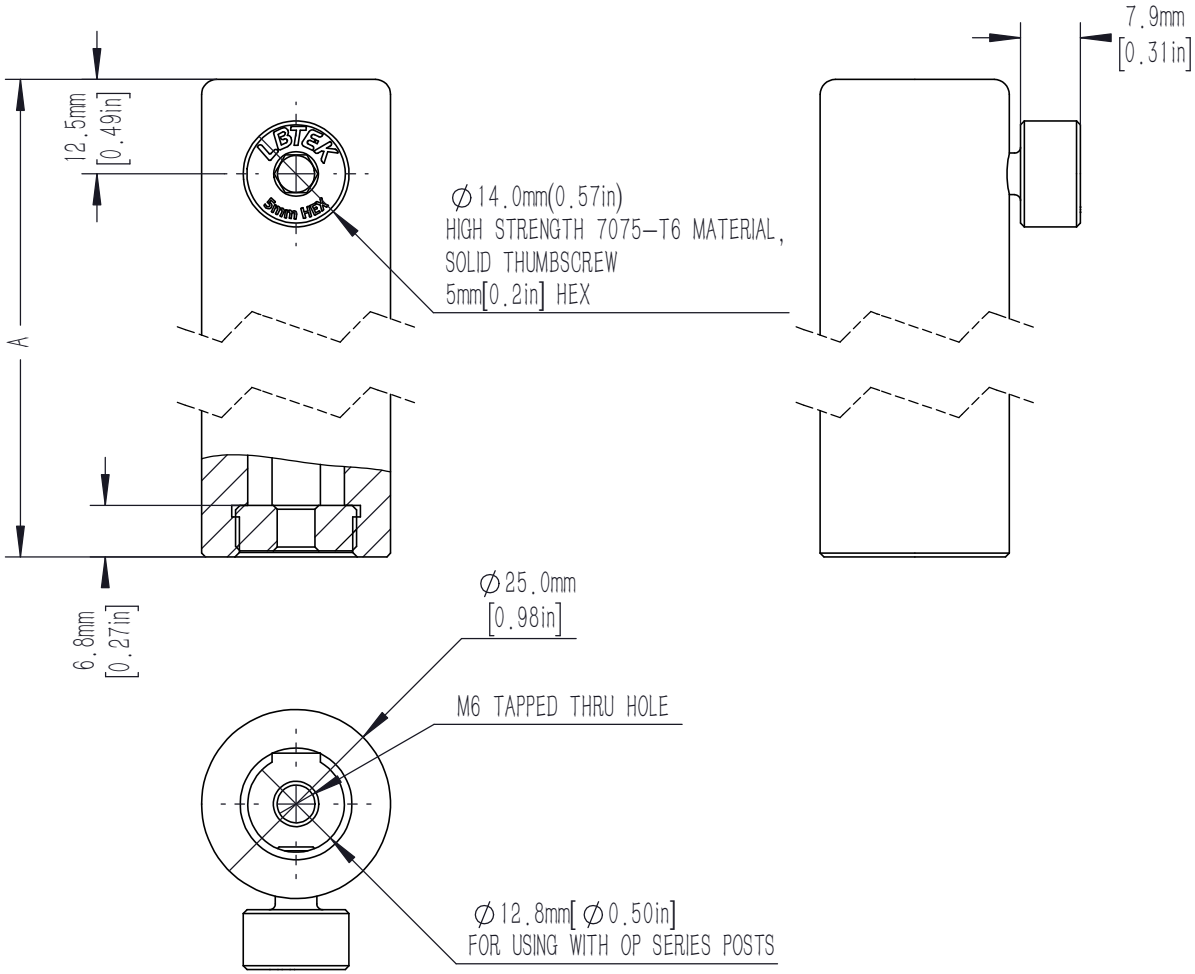

3D VIEW IS SHOWN AS PH-75A.

No.	ITEM	A LENGTH /mm[in]	WEIGHT/ kg
1	PH-25A	25[0.98]	0.04
2	PH-40A	40[1.57]	0.05
3	PH-50A	50[1.97]	0.06
4	PH-75A	75[2.95]	0.08
5	PH-100A	100[3.94]	0.11
6	PH-150A	150[5.91]	0.16

DRAWING PROJECTION			LBTEK			
	NAME	DATE	PH-**A			
DRAWN	CZH	DEC./04th/20	POST HOLDER			
APPROVAL	YCH	DEC./04th/20	MATERIAL	WEIGHT	SCALE	REV
FOR INFORMATION ONLY NOT FOR MANUFACTURING PURPOSES			N/A	** Kg	1:1	C