NUMBER	PART DESCRIPTION
①	CRM-1AS
②	RCP25-488-M

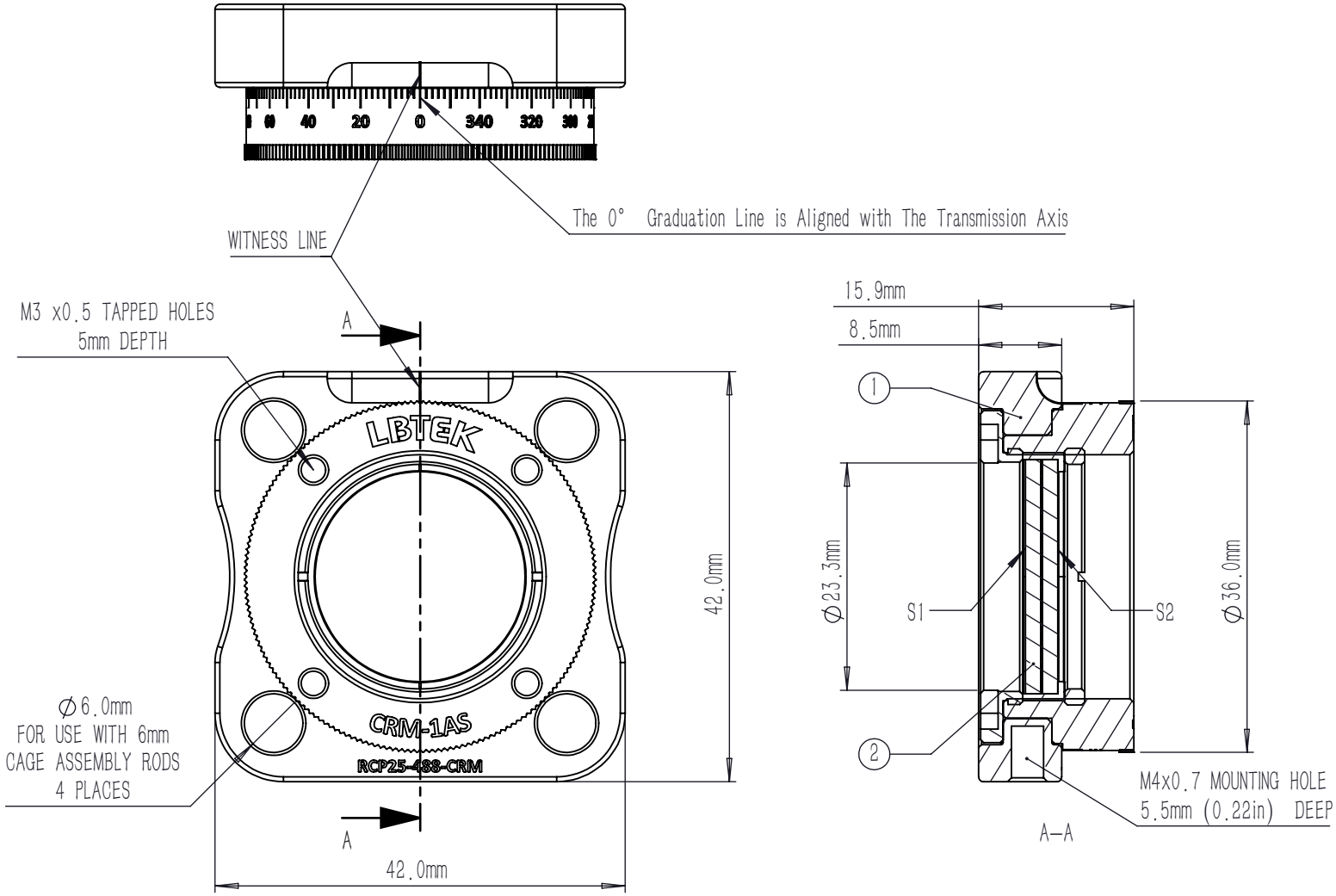

NOTES

1. OPERATION WAVELENGTH: 488 nm
2. CLEAR APERTURE: ∅20 mm
3. SURFACE QUALITY (S/D) : 60/40
4. COATING (S1,S2) : Ravg<0.5%@400 nm-700 nm
5. HANDEDNESS: Right-Handed Circular Polarization

DRAWING PROJECTION			LBTEK			
	NAME	DATE	RCP25-488-CRM			
DRAWN	SHAN	FEB./27th/26	Right-handed Circular Polarizer			
APPROVAL	WCHENG	FEB./27th/26	MATERIAL	WEIGHT	SCALE	REV
FOR INFORMATION ONLY NOT FOR MANUFACTURING PURPOSES			N/A	41.37g	3:2	A