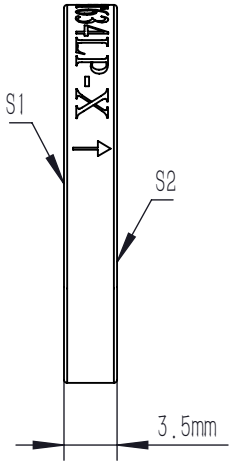

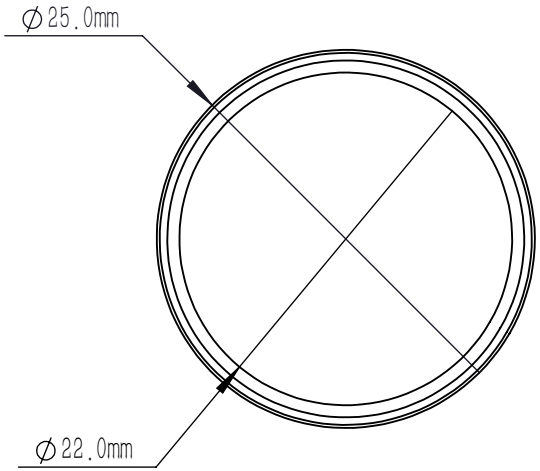

NOTES

1. MATERIAL: UVFS
2. CLEAR APERTURE: 22 mm
3. CUT-ON(CUT-OFF) WAVELENGTH: 787 nm
4. TRANSMITTED WAVEFRONT: λ@633 nm
5. SURFACE QUALITY(S1, S2): 60/40(S/D)
6. COATING(S1): LONGPASS FILTER, 0° AOI
   Tabs≥92%@790 nm–900 nm;
   Tavg≥95%@790 nm–1280 nm;
   ODabs≥6@610 nm–785.0 nm;

DRAWING PROJECTION			LBTEK			
	NAME	DATE	RET787LP–X			
DRAWN	JLIU	AUG./7st/25	RAMAN LONGPASS FILTER ∅25 mm×3.5 mm, 787 nm			
APPROVAL	WCHENG	AUG./7st/25	MATERIAL	WEIGHT	SCALE	REV
FOR INFORMATION ONLY NOT FOR MANUFACTURING PURPOSES			UVFS	1.8 g	2:1	A