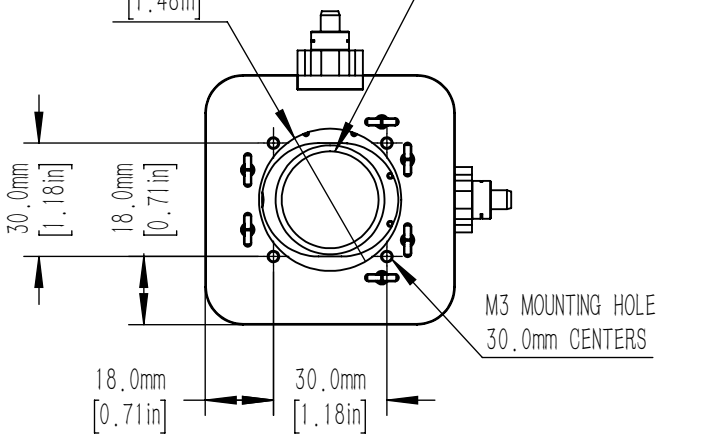

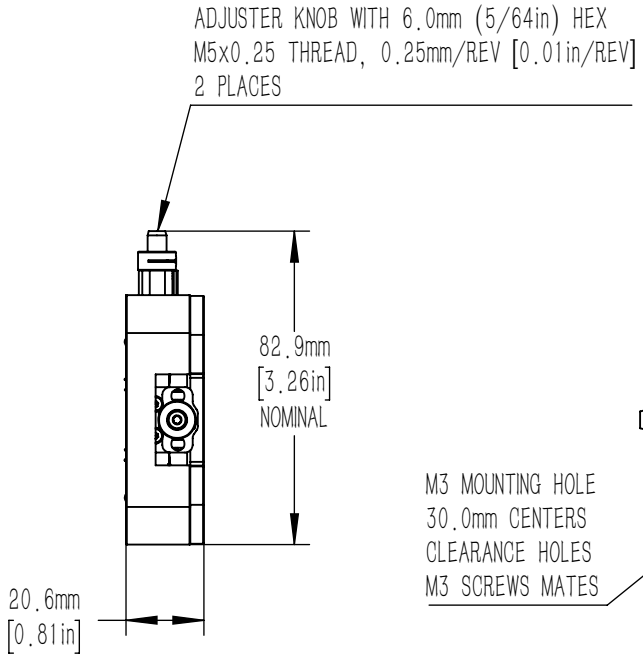

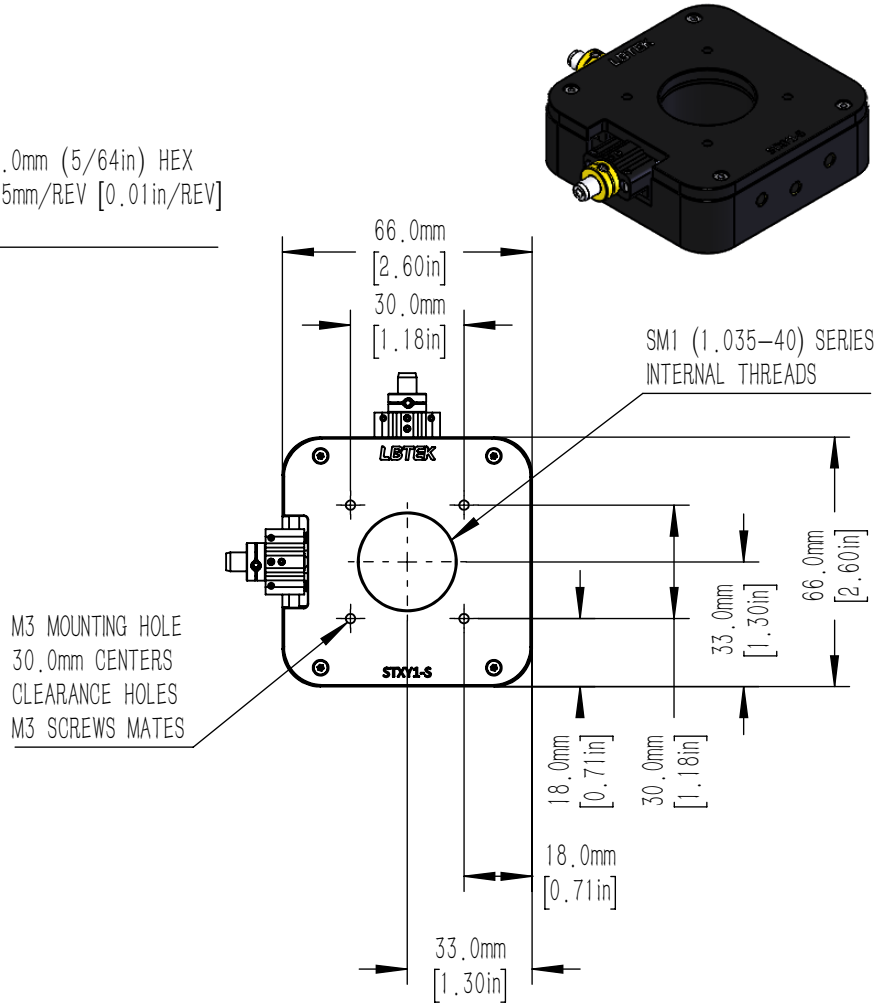

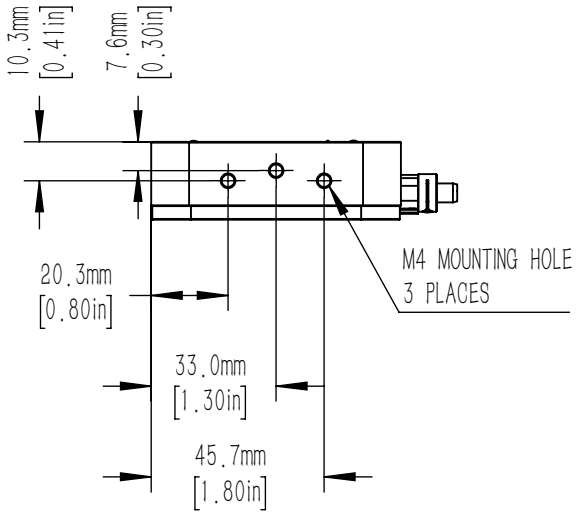

DRAWING PROJECTION			LBTEK			
	NAME	DATE	STXY1–A			
DRAWN	KZH	FRI./18th/22	XY TRANSLATOR WITH THREAD PAIR			
APPROVAL	ZXU	FRI./18th/22	MATERIAL	WEIGHT	SCALE	REV
FOR INFORMATION ONLY NOT FOR MANUFACTURING PURPOSES			ALUMINIUM	0.172 Kg	1:2	B