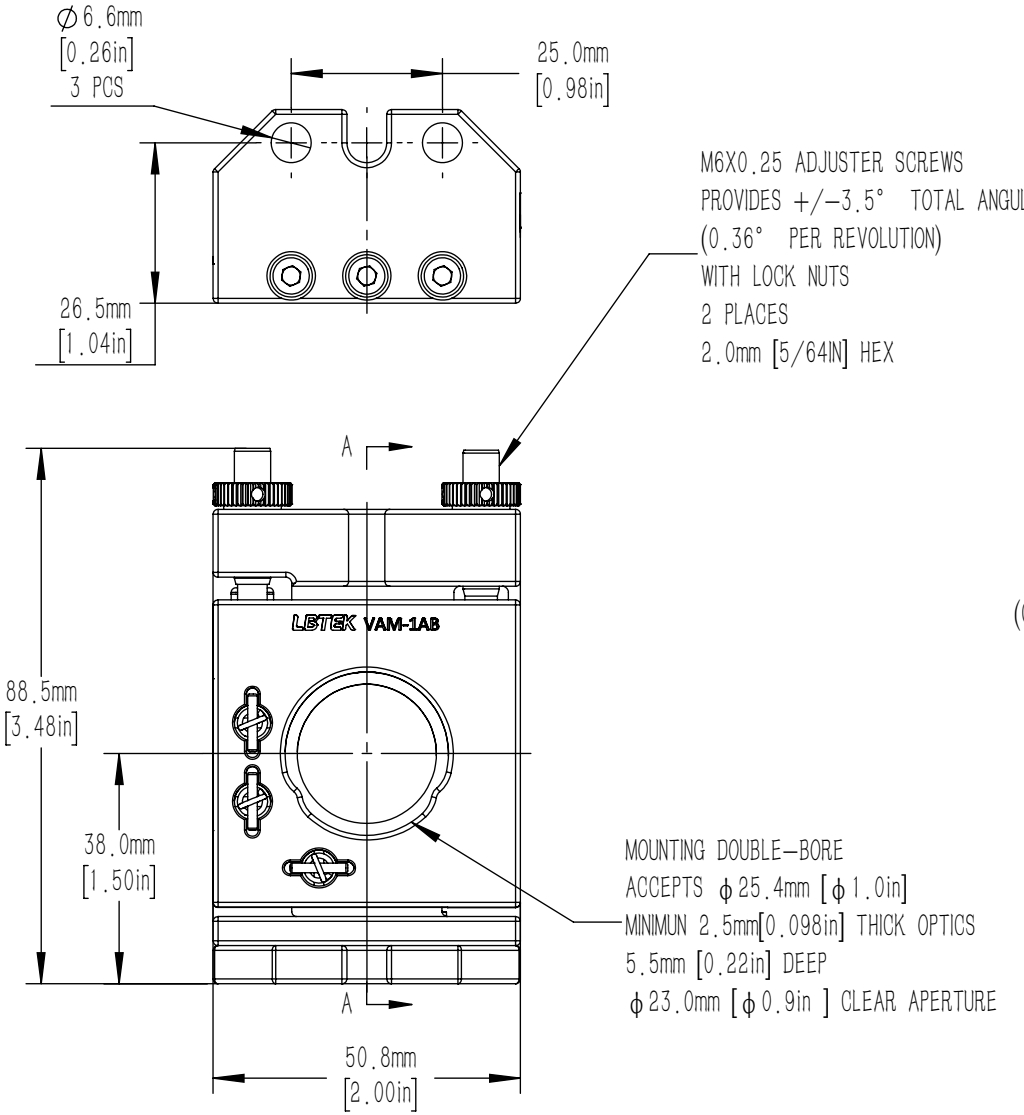

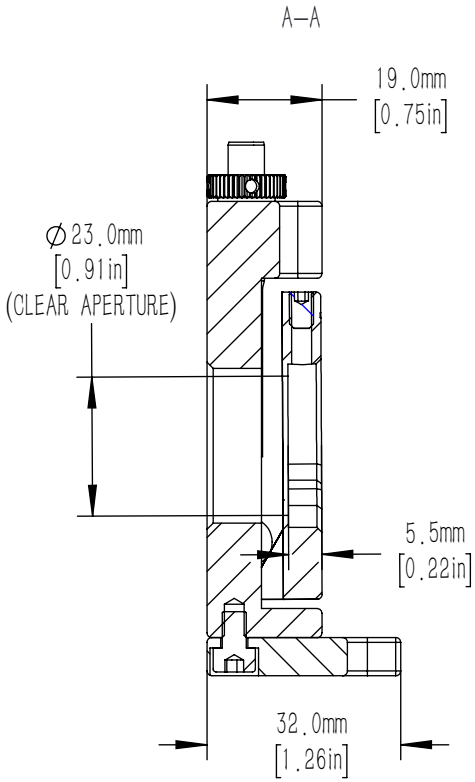

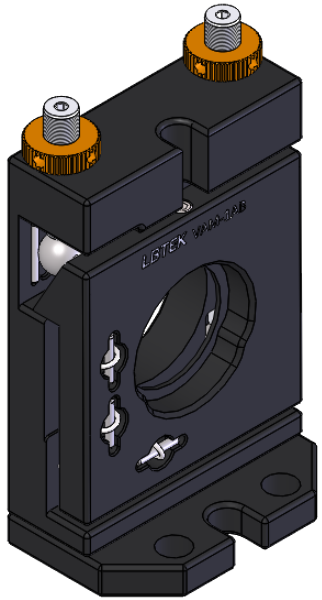

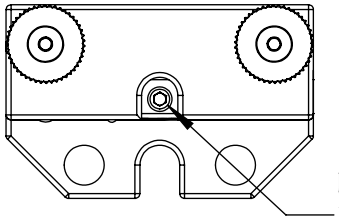

POM−TIPPED SET SCREW
FOR SECURING OF MOUNTED OPTIC
2.0mm [5/64in] HEX

DRAWING PROJECTION			LBTEK			
	NAME	DATE	VAM−1AB			
DRAWN	HDE	SEP./8th/22	VERTICAL ADJUSTMENT MOUNT FOR ϕ25.4mm OPTICS			
APPROVAL	ZXU	SEP./8th/22	MATERIAL	WEIGHT	SCALE	REV
FOR INFORMATION ONLY NOT FOR MANUFACTURING PURPOSES			ALUMINUM	0.171 Kg	4:5	B